SAFT AMERICA INC
711 INDUSTRIAL BOULEVARD
VALDOSTA, GEORGIA 31601

Nickel Cadmium
Aircraft Battery
Saft Model 4078-3
Bombardier Reference 600-59151-5
4078-24
Bombardier Reference 600-59151-9
40178-24
Bombardier Reference 600-59151-11
and 40178-26
Bombardier Reference 600-59151-13

COMPONENT MAINTENANCE MANUAL

WITH

ILLUSTRATED PARTS LIST

RECORD OF REVISIONS

REVISION No.	REVISION DATE	ISSUE DATE	BY
1	08/21/98	08/21/98	Saft
2	06/30/00	11/30/00	Saft

RECORD OF TEMPORARY REVISIONS

TEMPORARY REVISION No.	PAGE NUMBER	ISSUE DATE	BY	DATE REMOVED	BY

NOTE: To be deleted upon issue of a formal revision

SERVICE BULLETIN LIST

NUMBER	BRIEF DESCRIPTION	TYPE AFFECTED
SAI398	Conversion to 4078-24	4078-3
SAI530	Conversion to 600-59151-13	4078-24, 40178-24

LIST OF EFFECTIVE PAGES

SUBJECT	PAGE	DATE
Title Page	T-1	Jun 30/00
	T-2	Blank
Record of Revisions	RR-1	Jun 30/00
	RR-2	Blank
Record of Temporary Revisions	RTR-1	Jun 30/00
	RTR-2	Blank
Service Bulletin List	SBL-1	Jun 30/00
	SBL-2	Blank
List of Effective Pages	LEP-1	Jun 30/00
	LEP-2	Blank
Table of Contents	TC-1	Jun 30/00
	TC-2	Blank
List of Figures	LOF-1	Jun 30/00
	LOF-2	Blank
Introduction	INTRO-1	Jun 30/00
	INTRO-2	Jun 30/00
Description and Operation	1	Jun 30/00
	2	Jun 30/00
	3	Jun 30/00
	4	Jun 30/00
	5	Jun 30/00
	6	Blank
Testing and Fault Isolation	101	Jun 30/00
	102	Jun 30/00
	103	Jun 30/00
	104	Jun 30/00
Disassembly	301	Jun 30/00
	302	Jun 30/00
Cleaning	401	Jun 30/00
	402	Jun 30/00
	403	Jun 30/00
	404	Blank
Check	501	Jun 30/00
	502	Jun 30/00
	503	Jun 30/00
	504	Jun 30/00
	505	Jun 30/00
	506	Jun 30/00
	507	Jun 30/00
	508	Jun 30/00
	509	Jun 30/00
	510	Jun 30/00
	511	Jun 30/00
	512	Blank
Repair	601	Jun 30/00
	602	Jun 30/00
Assembly	701	Jun 30/00
	702	Jun 30/00
	703	Jun 30/00
	704	Jun 30/00
Fits and Clearances	801	Jun 30/00
	802	Blank
Special Tools, Fixtures, and Equipment	901	Jun 30/00
	902	Jun 30/00
	903	Jun 30/00
	904	Jun 30/00
Illustrated Parts List	1001	Jun 30/00
	1002	Jun 30/00
	1003	Jun 30/00
	1004	Jun 30/00
	1005	Jun 30/00
	1006	Jun 30/00
	1007	Jun 30/00
	1008	Jun 30/00
	1009	Jun 30/00
	1010	Blank
	1011	Jun 30/00
	1012	Jun 30/00

TABLE OF CONTENTS

	PAGES
DESCRIPTION AND OPERATION	
1. Description	1
2. Operation	3
TESTING AND FAULT ISOLATION	
1. Testing	101
2. Fault Isolation	101
DISASSEMBLY	
1. Disassembly	301
CLEANING	
1. Light Cleaning	401
2. Thorough Cleaning	401
3. Lubrication	402
CHECK	
1. Maintenance Checks	501
2. Maintenance Operation In Workshop	501
3. General Overhaul	509
REPAIR	
1. Battery Condition	601
2. Polarization Test	601
3. Supplementary Electrical Test Before Repair	601
ASSEMBLY AND STORAGE	
1. Assembly	701
2. Storage	702
FITS AND CLEARANCES	
1. Torque Table	801
2. Fits and Clearances Table	801
SPECIAL TOOLS AND EQUIPMENT	
1. Special Tools	901
2. Consumable Materials	904
ILLUSTRATED PARTS LIST	
1. General	1001
2. How to Use Detailed Parts List	1001
3. Terms and Abbreviations Used	1003
4. Changes	1004
5. Vender Codes	1005
6. Illustrated Parts Breakdown	1005

LIST OF FIGURES

		PAGES
Figure 1	4078-3 and 4078-24 battery (40178-24, 40178-26 not shown)	2
Figure 501	Periodic check	502
Figure 502	Level adjustment with syringe and calibrated nozzle	504
Figure 503	Regular check	508
Figure 504	General overhaul	510
Figure 701	4078-3, 4078-24, 40178-24 and 40178-26 battery circuit	704
Figure 901	Polyamide key for vented filler caps made of polyamide	902
Figure 902	Syringe with nozzle	902
Figure 903	Cell removal tool	903
IPL Figure 1	Battery, Exploded View (4 Sheets)	1006 -1009

INTRODUCTION

1. GENERAL

A. This equipment maintenance manual with illustrated parts list has been produced in conformity with Air Transportation Association of America standard No. ATA 100. It should permit a maintainer not familiar with the equipment to determine its condition and to carry out repair.

B. The operations described may only be carried out in a specialized workshop, which has the special tooling and test benches. (See SPECIALIZED TOOLS AND EQUIPMENT)

C. The manual does not deal with current techniques or the adaptation of the operations to ordinary methods that are available in the repair shop.

2. PRESENTATION OF THE MANUAL

A. For page numbering, a section of numbers is used for each subject. In the case of small and simple equipment, several subjects may be treated on the same page.

1 - 100	DESCRIPTION AND OPERATION
101 - 200	TESTING AND FAULT ISOLATION
201 - 300	(Not used)
301 - 400	DISASSEMBLY
401 - 500	CLEANING
501 - 600	CHECK
601 - 700	REPAIR
701 - 800	ASSEMBLY AND STORAGE
801 - 900	FITS AND CLEARANCES
901 - 1000	SPECIAL TOOLS AND EQUIPMENT
1001-1100	ILLUSTRATED PARTS LISTS

B. All values are, in general, expressed in units (or multiples of the units) of the system international (S.I.). In certain cases, units of more common usage are employed.

DESCRIPTION AND OPERATION

1. DESCRIPTION

A. General Description

The Saft alkaline battery has 20 semi-open, nickel-cadmium VHP 430KH-3 cells with welded polyamide cases.

It is connected to the on-board systems of the aircraft, and is used:

- For starting the engines
- On the ground before electrical ground power is applied to the aircraft on-board systems
- Airborne in case of malfunction or failure in the normal power supply

The battery is charged on the aircraft by a dedicated charger.

B. Characteristics

(1) Technical characteristics

- Nominal voltage: 24V
- Rated capacity: 43Ah at 1-hour rate
- Connector: NFL 56-205A or MS 3509
- Electrolyte: Sol. KOH s.g. approximately 1.30
- Consumable volume of electrolyte 25cm^3 per cell
- Maximum dimensions of battery base: L=268.4mm (10.57in)
  W=305.5mm (12.03in)
  H=262.1mm (10.325in)
- Maximum weight: 38.4kg (84.7lb.)
- One temperature sensor with: one thermistor 3k Ω ±2% @ 25°C (77°F)

(2) Operational characteristics

- Operation temperature: -40°C to +70°C (-40°F to +158°F)

- Maximum instantaneous power:

  - at +23°C (+77°F), 12V, 15s: 16.9Kw

  - at -18°C (+05°F), 12V, 15s: 11.6Kw

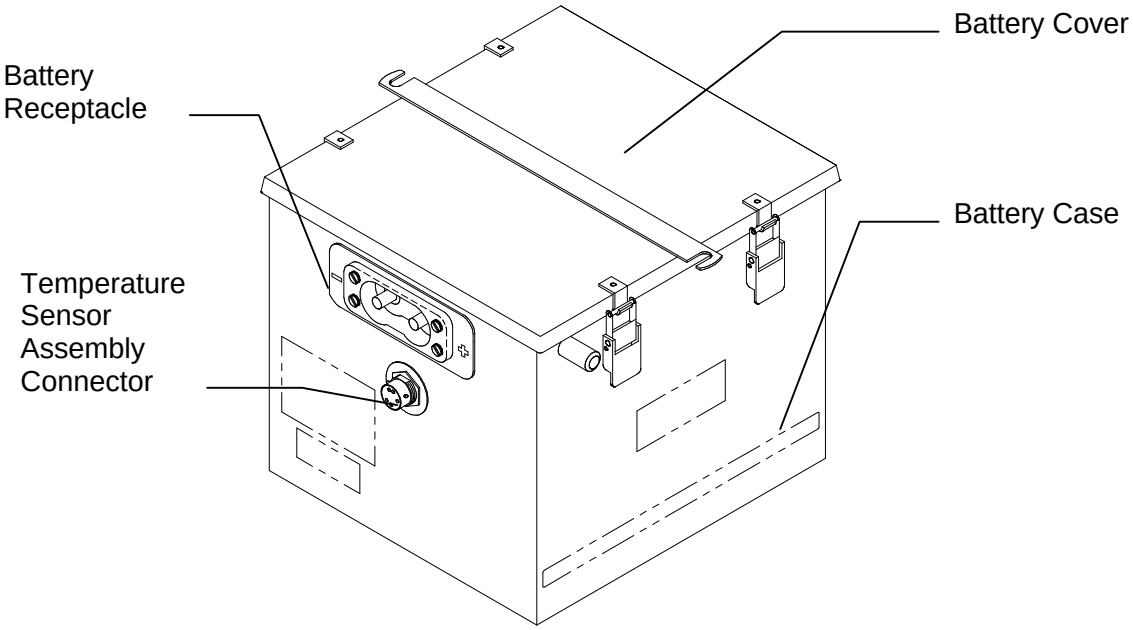

4078-3 and 4078-24 Battery
Figure 1

C. Detailed Description

The battery contains 20 VHP 430KH-3 (220, IPL Fig 1) cells housed in a stainless steel box.

The box (010) is lined with thin sheets of insulation and wedges (020). The cells are maintained upright by means of molded silicon elastomer part fastened to the box cover that presses against the top of the cells. Cells are interconnected by rigid, nickel-plated copper links (090, 100, 120, and 130). End cells are connected by output connection (110) to an electrical connector (40).

This connector connects the battery to the aircraft.

The box (010) is fitted with:

- a removable cover and pad assembly (030)
- two vent tubes
- four latches

2. OPERATION

A. Charge

(1) Flight charging

In order for the battery to be correctly charged in flight, the charger must be functioning properly and should be checked per the manufacturer's recommendation.

For a given voltage setting, the higher the battery temperature, the higher the residual charge current.

The consumption of water from the electrolyte is directly proportional to this residual charge current. It is, thus, necessary to know the exact normal operating temperature of the batteries in order to charge them under optimum conditions.

(2) Ground charging

All battery maintenance or overhaul operations must be carried out in the workshop.

WARNING: GROUND CHARGING OF 4078-3, 4078-24, 40178-24, and 40178-26 BATTERIES MUST BE CARRIED OUT WITH THE COVER REMOVED TO AVOID THE ACCUMULATION OF GAS IN THE BATTERY BOX.

- Constant current charge.

To charge a completely discharged battery, use one of the following procedures:

TABLE 1 CONSTANT CURRENT CHARGE	
Main Charge	Overcharge
Procedure 1: 4.3 Amps (0.1 C_1A) until battery reaches 30V Time: Minimum: 10 hours Maximum: 12 hours	+ Completion of charge 4.3 Amps (0.1 C_1A) for 4 hours at end of charge with all cells ≥1.50V.
Procedure 2: 21.5 Amps (0.5 C_1A) until battery reaches 31V Time: Minimum: 2 hours Maximum: 2 hours 30 min.	+ Completion of charge 4.3 Amps (0.1 C_1A) for 4 hours at end of charge with all cells ≥1.50V.
Procedure 3: 43 Amps (1 C_1A) until battery reaches 31.4V. Time: Minimum: 1 hour Maximum: 1 hour 15 minutes	+ Completion of charge 4.3 Amps (0.1 C_1A) for 4 hours at end of charge with all cells ≥1.50V.

NOTE: If the battery voltage has not risen sufficiently during this maximum charging time or if the battery voltage is exceeded before minimum charge time: refer to "TESTING AND FAULT ISOLATION".

(3) Battery partially discharged and state of discharge unknown.

TABLE 2
Discharge at 43 Amps (1 C_1A) down to 20 V.
Charge: Refer to Table 1 above, Constant Current Charge.

(4) The battery may also be charged at one of the constant current values given in section 2.A.(2) until the voltage at the battery terminals reaches the corresponding recommended voltage (30, 31 or 31.4V).

TABLE 3
Charge at 30V at ambient temperature during 4 to 5 hour
Adjusted charge voltage: for a +5°C (+41°F) battery temperature: 31V for a +35°C (+95°F) battery temperature: 31.4V

B. Discharge

The rated capacity (C_1A) of the battery corresponds to a discharge time of 1 hour; when completely charged, it can therefore provide a 43A current for one hour. For short periods of time the battery can, however supply much higher currents than the rated discharge without being damaged. For example, a battery with a rated capacity of 43Ah can provide peaks of current as much as twenty times its normal capacity.

C. Precautions

(1) Apart from providing periodic, regular, and general overhaul maintenance, the only precautions necessary to obtain proper service from the battery are as follows:

(a) Do not install the battery in an aircraft location that is overly hot.

(b) Follow ventilation instructions carefully.

(c) Check the charge level regularly.

1 Make up for any loss of charge which is not due to incorrect adjustment of the charger, by recharging on the ground.

2 Any loss of charge due to incorrect adjustment of the charger must be corrected by charger maintenance.

(2) Periodically verify:

(a) The electrolyte level, especially during hot weather.

(b) The tightness of connection nuts.

(c) The adjustment of the charger.

TESTING AND FAULT ISOLATION

1. TESTING

Testing operations are described in the chapter entitled CHECK.

2. FAULT ISOLATION

FAULTS	POSSIBLE CAUSES	REMEDIES
Zero volt with battery set to "charge"	Defective electrical connector (not making contact). Link loose or broken.	Check electrical contact and links and tightness of nuts (CHECK) Examine the electrical contacts and links.
Zero volt with battery set to "discharge”	Battery fully discharged Battery circuit open or defective contacts. Cell completely dry	Recharge battery (DESCRIPTION AND OPERATION) Check insulation (CHECK) Check contacts and links and tightness of terminal nuts (CHECK) Refer to the related following steps
Leakage of electrolyte	Incorrect adjustment of level Cell polarity reversed during high rate discharge (e.g. during starting)	Disassemble and clean the battery (DISASSEMBLY AND CLEANING) Check electrolyte level (CHECK) Disassemble and clean the battery (DISASSEMBLY AND CLEANING) Check electrolyte level (CHECK)
Leakage of electrolyte (cont.)	Overcharge at high temperatures or using excessive current	Check the on-board charging circuit and if necessary adjust to normal operating temperature (DESCRIPTION AND OPERATION)

FAULTS	POSSIBLE CAUSES	REMEDIES
		Disassemble and clean battery (DISASSEMBLY AND CLEANING) Check electrolyte level (CHECK)
Traces of electrolyte in battery box	Damaged cell case Leakage of electrolyte	Check sealing of cells (CHECK) Disassemble and clean the battery (DISASSEMBLY AND CLEANING) Check electrolyte level (CHECK)
Excessive water consumption in all battery cells	Heavy overcharge or overcharge at high temperatures	Check the on-board charging circuit and adjust if necessary to normal operating temperature (DESCRIPTION AND OPERATION)
One or several cells whose water consumption differs significantly from that of other cells in the battery: • more than 30% above average	Leaking cell (s)	Check sealing of cell (s) (CHECK) Disassemble and clean the battery (DISASSEMBLY AND CLEANING) Check electrolyte level (CHECK)
• 25% or less of the average value	Cell (s) with damaged separator (s)	Perform supplementary test (REPAIR) If necessary, replace with new Saft cell (DISASSEMBLY, ASSEMBLY AND STORAGE)
Corrosion on links	Operation in acid atmosphere	Make sure that battery test bench and storage areas are free from materials which may produce acid fumes

FAULTS	POSSIBLE CAUSES	REMEDIES
	Mechanical damage to nickel plating	Replace damaged links (DISASSEMBLY AND ASSEMBLY; STORAGE)
Indications of link overheating	Loose terminal nuts	Check tightness (CHECK)
Cell with abnormally high voltage at start of charge	Cell dry	As soon as the fault is observed add 10 cc of distilled water to the cell. Do not adjust precisely until the end of charge. NOTE: A cell charging with insufficient electrolyte may also show considerable temperature rise
Main charge cut off voltage reached before minimum time or not reached at the maximum time	Battery not fully discharged or strongly unbalanced	Do a regular check (Refer to Check).
Cell with abnormally low voltage at end of charge (Less than 1.5V at 4.3A at +20°C (+68°F))	Cell which has worked at excessive temperatures and charge rates and whose separator is damaged	Replace cell (DISASSEMBLY, ASSEMBLY AND STORAGE)
Low capacity cell (Reversed voltage or a normal polarity voltage of less than 1V at the end of a 1 hour discharge at 43A)	Normal wear after long service Exceptionally heavy use (Frequent self-starting); operation at high temperatures, with low electrolyte level, etc.	Replace with new Saft cell (DISASSEMBLY, ASSEMBLY AND STORAGE) Treat appropriately (REPAIR)
Cell with swollen case.	Cell operated with low electrolyte level; deterioration of separators and damaged plates.	Replace with new Saft cell (DISASSEMBLY, ASSEMBLY AND STORAGE).

FAULTS	POSSIBLE CAUSES	REMEDIES
Cell with zero voltage when battery circuit is open	Short circuited cell	Replace with new Saft cell (DISASSEMBLY, ASSEMBLY AND STORAGE
Low insulation	Leakage of electrolyte	Disassemble and clean battery (DISASSEMBLY AND CLEANING) Check electrolyte level (CHECK)

DISASSEMBLY

1. DISASSEMBLY (refer to Section 10, Figure 1)

WARNING: ALL OPERATIONS MUST BE CARRIED OUT ON A COMPLETELY DISCHARGED BATTERY.

NOTE: See the Testing And Fault Isolation chapter to determine the condition of component and the most probable cause of its malfunction. This will indicate the extent of disassembly required and thus, avoid completely disassembling and rebuilding the component.

A. Remove the cover (030, IPL Fig. 1).

B. Removal of vent valves:

(1) Unscrew the vent valve (230) with the special tool (fig. 901).

(2) Remove the vented filler cap (230) complete with its O-ring (240).

C. Removing a cell:

(1) Ensure vent valve is tight.

(2) Unscrew the nuts (140) that attach the links (090 to 130) to the cell. Remove the washers (150).

(3) Remove the links (090 to 130) from the cell terminals.

(4) Attach the threaded end of the special tool (fig 903) to one of the cell terminals and pull upwards.

D. Removing connector:

(1) Unscrew the nuts (070) that attach the links (110) to the connector (040). Remove the spring washers (080).

(2) Remove the links (110).

(3) Remove the four screws (060) from the connector.

(4) Remove the connector (040) with its O-ring (050) from the box (010).

E. Removing complete connector and sensor assembly

(1) Unscrew the nuts (070) that attach the links (110) to the connector (040). Remove the spring washers (080).

(2) Remove the links (110).

(3) Cut the wire tie.

(4) Remove the nut (170) which fix the sensor on link (130) and lift off the washer (180) and sensor.

(5) Remove the nut (200).

(6) Remove the auxiliary connector with its gasket (210) from the box (010).

CLEANING

1. LIGHT CLEANING

WARNING: EYE PROTECTION IS REQUIRED WHEN WORKING WITH COMPRESSED AIR.

CAUTION: To avoid cell contamination, make sure that the vent valve is tight.

A. If a clean, filtered supply of compressed air is available, the simplest and fastest method of cleaning the cells is spraying vigorously across the tops to remove all dust and mineral salts which may have accumulated out of the box.

B. To avoid short-circuits, use a rubber tube or an insulated nozzle.

2. THOROUGH CLEANING

CAUTION: To avoid cell contamination, make sure that the vent valve is tight.

CAUTION: To avoid cell contamination, do not direct running water on the vent valve area.

Disassemble the battery (see DISASSEMBLY) and then clean all the components.

A. Cells:

(1) The simplest method of eliminating all traces of electrolyte and mineral salts from the terminals, covers, and sides of the cell cases is to wash them in warm deionized water with a soft, non-metallic brush.

(2) To avoid cell contamination, make sure that the vent valve is tight.

(3) Do not soak the cells in water.

(4) Allow the cell dry after wiping.

B. Box:

(1) Wash with water and allow to dry after wiping.

C. Nuts, spring washers, and links:

(1) Clean by brushing in warm water.

(2) Allow to dry.

D Packing pieces and leak proof insulator:

(1) Clean in warm water and let dry.

(E) Vented filler caps:

(1) Remove vented filler caps (see DISASSEMBLY).

(2) Replace vented filler caps with spares or cover the cell orifices to prevent the entry of foreign matter.

(3) Soak the vented filler caps for several hours (overnight, for example) in a container of distilled water (or, if not available, in very clean tap water) to dissolve any salts which might have collected in the vent hole.

WARNING: DO NOT USE PETROL, TRICHLOROETHYLENE, OR ANY OTHER SOLVENTS.

(4) Before installation back into the cells, verify operation of vented filler caps:

(a) Attach the vented filler cap complete (230) with its O-ring (240) onto checking fixture (Saft drawing 024554-000).

(b) Connect this tube to a supply of compressed air via an adjustable reducing valve.

(c) Set the pressure to 7.25 psi (0.5 bars) and submerge the vented filler cap in a container of water. Air bubbles will escape if the vented filler cap is in good condition. If no bubbles are observed increase the pressure until bubbles appear and then reduce the pressure slowly to 1.45 psi (0.1 bars) noting at what pressure the air flow ceases.

(d) Reject all vented filler caps whose operating pressure is greater than 10 psi (0.7 bars) after this "freeing" operation or less than 2 psi (0.14 bars).

(5) Install the vented filler caps (see ASSEMBLY).

3. LUBRICATION

A. After cleaning the battery and with the vented filler caps in place, lightly grease the terminals and links with neutral (non-acid) petroleum jelly or light oil applied with a paintbrush.

CHECK

1. MAINTENANCE CHECKS

In addition to the checks specified for airborne or ground use, in normal service SAFT 4078-3, 4078-24, 40178-24, and 40178-26 batteries require the following maintenance operations:

A. Periodic Check (at least every 6 months): discharge the battery, charge the battery and adjust the electrolyte levels.

B. Regular Check (every 300 operating hours or at the needed level period): do an electrical treatment, adjust the electrolyte levels, and do a capacity test.

C. General Overhaul (every 600 operating hours or at least once a year): do an electrical treatment, adjustment of electrolyte levels, and capacity testing.

NOTE: These periods are given as an indication; modify in accordance with operational experience.

NOTE: Periodic and Regular Maintenance checks may be combined if operating hours do not meet times listed.

2. MAINTENANCE OPERATIONS IN WORKSHOP

A. Periodic Check: Every 6 months or during each aircraft check (fig. 501):

(1) Physically inspect battery for obvious damage.

(2) Check cleanliness of the battery.

(a) Perform light cleaning (see CLEANING para 1) if only dust is evident.

(b) Perform thorough cleaning (see CLEANING para 2) if salt or electrolyte traces are found.

(3) Check battery voltage.

(a) If voltage is less than 21V, perform a polarization test (see REPAIR para 2).

(4) Perform an insulation check (see CHECK para 2.E).

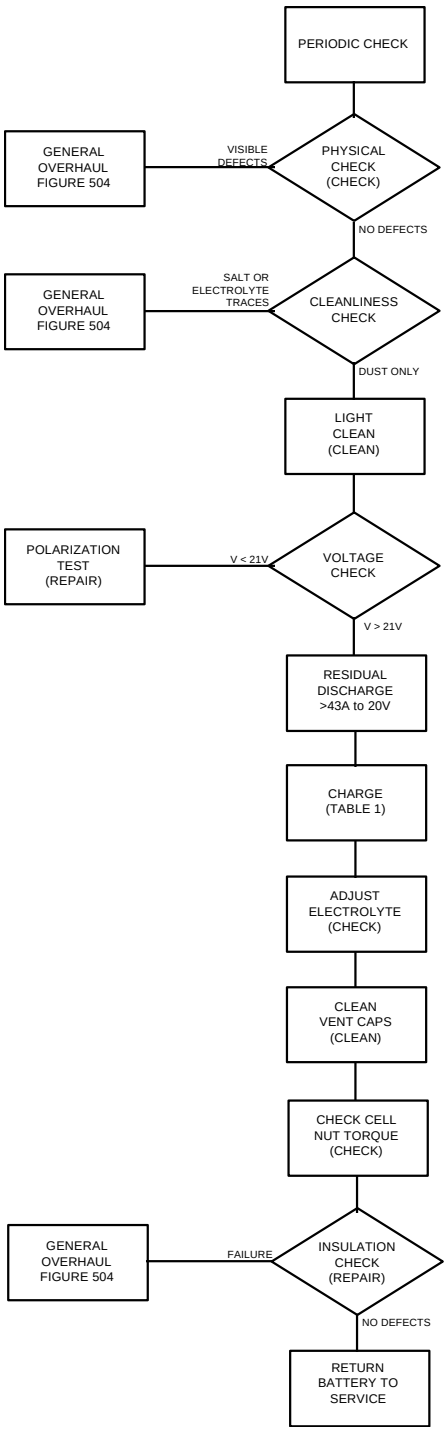

Periodic Check Diagram
Figure 501

(5) Residual discharge at 43A down to a voltage of 20V at battery terminals.

(6) Charge and adjust the electrolyte level.

(a) When the battery has reached the normal temperature range, +20°C to +25°C (+68°F to +77°F), charge the battery (see DESCRIPTION AND OPERATION para 2.A.(2) Table 1).

(b) During the last hour of the charge, measure the voltages of the individual cells (accuracy 0.5%). Once each cell has reached a minimum 1.50V, and with the charge current continuing to flow, adjust the level of the electrolyte in the cells. Record the quantity of the water added to each cell.

(c) The electrolyte level varies with the state of charge of the battery and does not therefore attain the maximum level until the battery is fully charged. The level reacts as if the plates absorbed a part of the electrolyte during the discharge and released it during the charge. Accurate measurements are valid only if made near the end of charge but while the battery is still being charged.

Any addition of liquid made without respecting these conditions would cause overflow during normal use. The level is correct when the distance, measured, under these conditions, between the vented filler cap seat and the electrolyte is 20mm (0.787in).

(d) If necessary, bring the level up to this value by adding distilled water.

WARNING: NEVER USE ACID OR ACIDULATED WATER WHEN ADJUSTING ELECTROLYTE LEVELS IN NICKEL-CADMIUM CELLS. THE SLIGHTEST QUANTITY OF ACID WILL CAUSE PERMANENT DAMAGE.

The simplest and most convenient tool for adjusting the level is a plastic syringe tube (P/N: 020915-004), similar to those used for medical injections, with a plastic nozzle fitted onto the conical end.

The length of the nozzle which enters the cell must be 20mm (0.787in); this length corresponds to the desired distance between the vented filler cap seat and the electrolyte. (See fig. 502).

1 By keeping the shoulder of the syringe nozzle in contact with the vented filler cap seat and pulling plunger upwards, the operator can monitor filling.

2 Low electrolyte levels will cause the syringe tube to remain empty when the plunger is drawn up.

3 Any excess electrolyte will be drawn into the syringe until the fluid level meets with the end of the nozzle.

4 If this check shows that some cells are insufficiently filled, inject distilled water into the cells. (As the syringe is small, it may be necessary to repeat this operation more than once per cell).

The level is correct when, having added some water to the cell, and with the shoulder of the syringe nozzle held against the vented filler cap seat, a small amount of liquid is drawn up by the plunger.

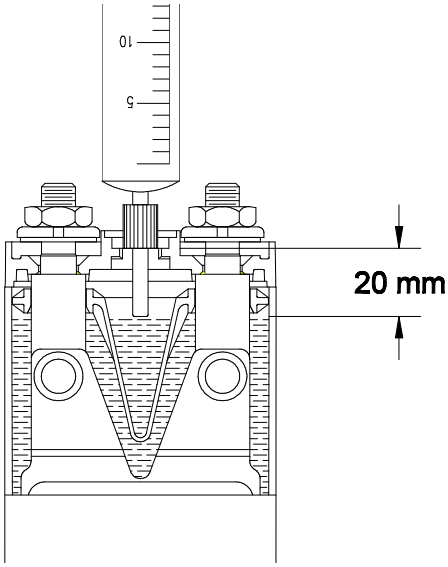

Topping-up with a syringe and calibrated nozzle
Figure 502

(e) Conclusions to be drawn from the above operations:

1 The battery is functioning properly if:

a Each individual cell voltage measured during the last hour of charge at 4.3A is at least 1.50V.

b Each cell required approximately the same quantity of distilled water which was less than $25cm^3$ ($1.55in^3$).

2 If all cells required the addition of more than $25cm^3$ ($1.55in^3$):

a The voltage setting of the charger in relation to the temperature during recharging should be checked.

b The electrolyte level should be checked more frequently.

3 Perform a complete overhaul (see "GENERAL OVERHAUL") of the battery if:

a One or several cells required considerably more or less water than the other cells.

b Individual cell voltages measured at the end of a 4.3A charge are less than 1.5V (see "TESTING AND FAULT ISOLATION").

(7) Clean the vented filler caps (see CLEANING) during electrolyte leveling.

(8) Check the tightness of the cell terminal nuts.

- Check that all nuts retaining the links are torqued to 87 lb-in (9.83Nm).

(9) Return battery to service.

B. Regular Check: (see figure 503) every 300 operating hours or at least once a year.

(1) Complete steps 1 through 4 in periodic check (see CHECK para 2.A).

(2) Discharge the residual capacity at 43A down to a voltage of 20V at the battery terminals.

(a) Measure and record the time from the start of discharge to the moment 20V is reached.

(3) Continue discharge by connecting a resistor of approximately 1Ω across each cell. (Resistors with clips attached to their leads can be easily attached to the cell terminals.)

(4) Leave resistors in place overnight.

(5) Remove all the resistors.

(6) Charge the battery (see DESCRIPTION AND OPERATION 2.A.(2) Table 1).

(7) Adjust the electrolyte level in the cells (see CHECK 2.A(5)(b) through (d)).

(8) Immediately after the charge and the adjustment level adjustment, perform a capacity check.

(a) Discharge the battery again at 43 Amps.

(b) Measure the terminal voltage of each cell.

(c) Record the time that is needed for the first cell to reach 1.0V and the battery terminal voltage to reach 20.0V.

(9) Conclusions to be drawn from the above tests:

(a) The battery is functioning properly if:

1 The first discharge (section 2.B) required more than 30 minutes.

2 The second discharge (section 2.B(1)) required at least one hour for the first cell to reach 1.0V.

3 Each individual cell voltage during the last hour of charge at 4.3A is at least 1.5V (accuracy 0.5%)

4 The quantity of distilled water added to each cell is approximately equal to or less than 25cm^3 (1.55in^3).

5 If the duration of the first discharge is less than 30 minutes but the second discharge time is correct (at least 1 hour) it may be concluded that the battery is in good condition but was not fully charged when removed from the aircraft. (may be due to insufficient recharge on board and/or discharge resulting from unexpected use of the battery after landing.)

(b) The battery must be given a complete overhaul (section 3) if:

1 The duration of the second discharge is less than 1 hour or if any cell has a voltage of less than 1 volt or reversed polarity before 1 hour of discharge.

2 Individual cell voltages measured during the last hour of charge at 4.3A are less than 1.50V.

3 One or several cells required considerably (10-25%) more or less distilled water than the other cells.

NOTE: The consumption of water by a Saft nickel-cadmium cell is proportional to the overcharge that it has received.

NOTE: The fact that one or more cells of the same battery consume noticeably more or less water than other indicates a defect:

a High consumption is generally caused by leakage.

b Low consumption is caused by damaged separator.

c Consumption is considered abnormal when it is 10-25% more or less than average.

10. Charge the battery (see DESCRIPTION AND OPERATION 2.A.(2) Table 1).

11. Return battery to service.

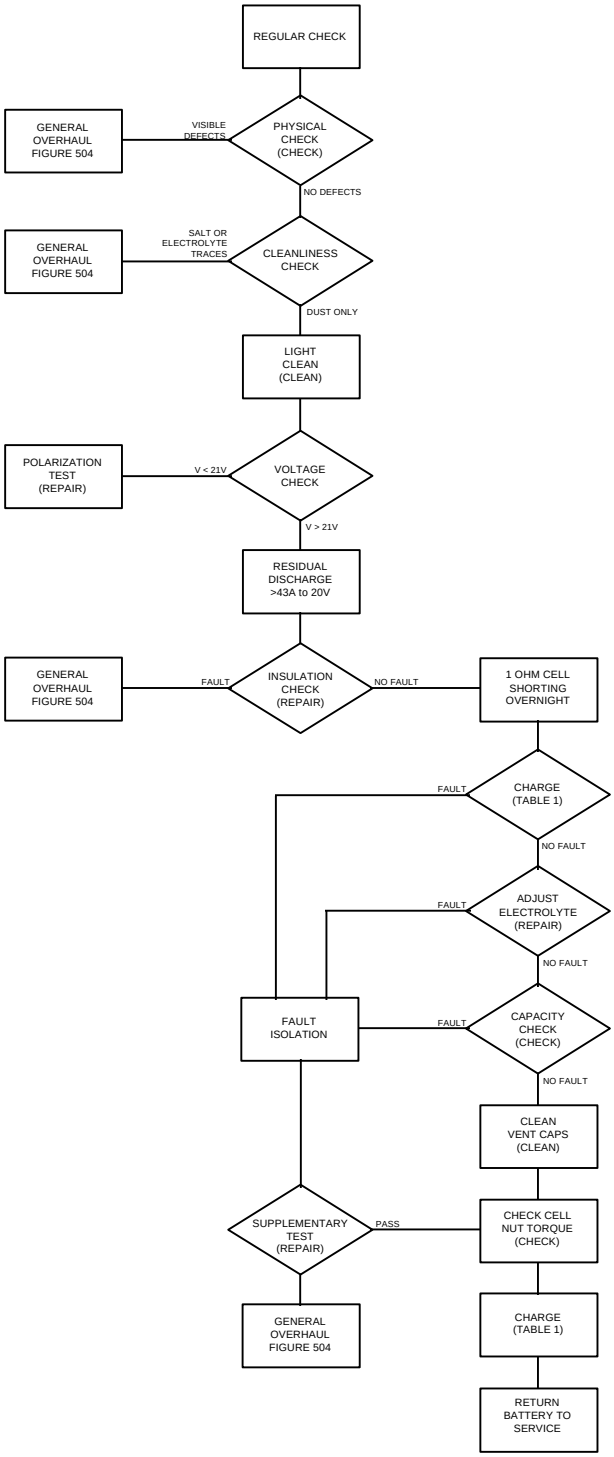

Regular Check Diagram
Figure 503

C. GENERAL OVERHAUL

In addition to the electrical tests described in section 2.B this overhaul includes a systematic disassembly and cleaning of all components of the battery. It must be carried out once a year.

(1) Disassemble the battery (see DISASSEMBLY).

(2) Clean the battery (see CLEANING).

(3) Test the battery

(a) Cells:

1 Check that the lower terminal nuts are correctly tightened to 44 lb-in. ± 8 lb-in (5 Nm ± 1 Nm).

(b) Box:

1 Straighten the box sides and flatten out any minor dents.

(c) Nuts, links, and spring washers:

2 Discard and replace any corroded or damaged components.

(d) Spacers:

1 Discard and replace all defective components.

(e) Connector:

1 Ensure that the connector is in good condition, both inner and outer surfaces. Replace if the contacts show any signs of corrosion, burning, or arcing.

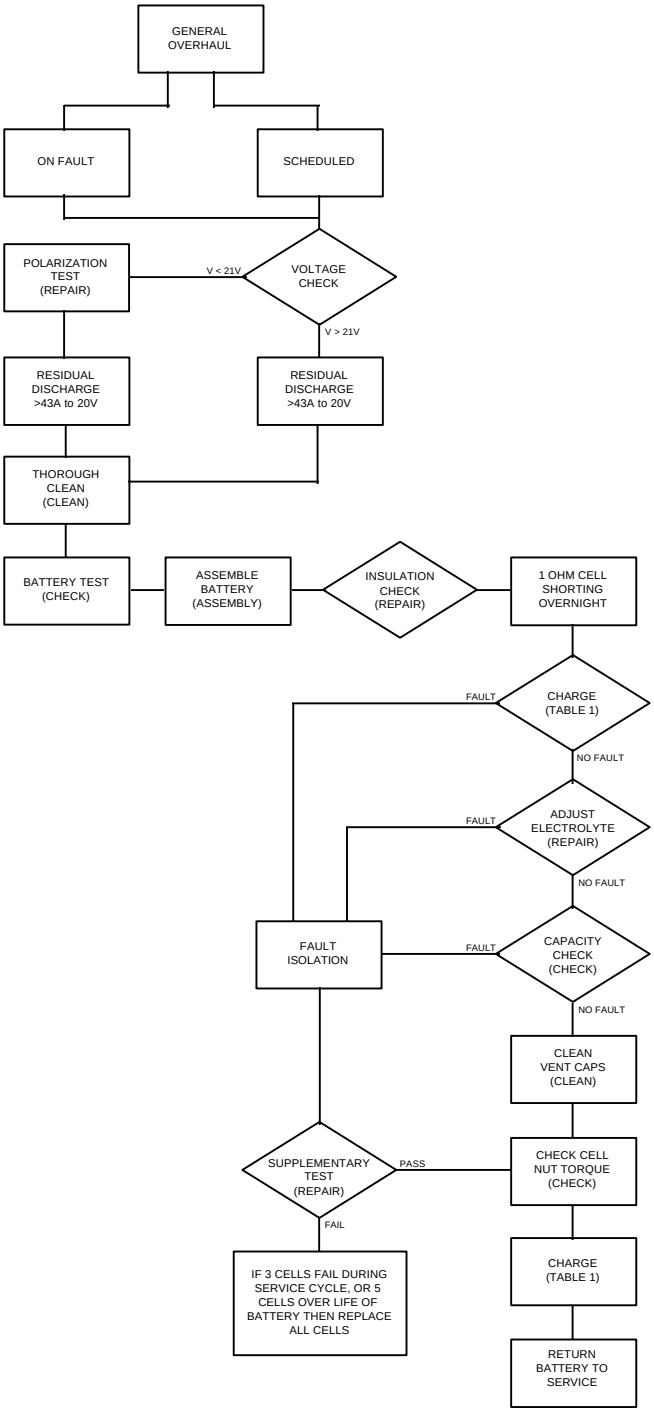

General Overhaul
Figure 504

D. Checking of temperature sensor:

NOTE: Checking of the temperature sensor can only be carried out while the battery is dismantled.

(1) Temperature sensor (P/N 019757-000) for the 4078-3 battery:

(a) Check that the test resistance value between the sensor lug and pin A is 0Ω at 25°C (77°F).

(b) Check that the resistance value between pins B and C is 3k Ω ±2% at 25°C (77°F).

(2) Temperature sensor (P/N 024634-000) for the 4078-24 and 40178-24 battery:

(a) Check that the test resistance value between the sensor lug and pin A is 4990Ω ±1% at 25°C ±2°C (77°F).

(b) Check that the resistance value between pins B and C is 3kΩ ±2% at 25°C ±2°C (77°F).

(3) Temperature sensor (P/N 025009-000) for the 40178-26 battery.

(a) Check that the test resistance value between the sensor lug and Pin A is 430Ω ±1% at 25°C ±2°C (77°F).

(c) Check that the resistance value between pins B and C is 3kΩ ±2% at 25°C ±2°C (77°F).

E. Insulation resistance:

(1) After completely reassembling the battery, measure the insulation resistance between the block of cells and the metal box. The value measured must be at least 10MΩ under 250V continuous using a Megohmmeter.

REPAIR

1. BATTERY CONDITION

A. Carry out a polarization test (see REPAIR), if following an unscheduled removal or before maintenance, a battery shows such abnormal features as:

(1) Any cells with reversed polarity.

(2) The battery open voltage is below 21.0V.

B Carry out a supplementary test (see REPAIR), if during periodic maintenance operations, or during a general overhaul battery shows such abnormal features as:

(1) End of charge voltage too low.

(2) Voltage during charge too high.

(3) Insufficient capacity.

(4) Abnormal water consumption.

2. POLARIZATION TEST

A. Charge the battery at 4.3A for 1.5 hour.

B. Leave the battery in open circuit condition for 1 hour.

C. Measure the open voltage of each cell

(1) If the cell open voltage is 0V or reversed carry out a supplementary test and proceed to repair. (see REPAIR)

(2) If every cell presents an open voltage above 0V, charge the battery (see DESCRIPTION AND OPERATION Table 1).

3. SUPPLEMENTARY ELECTRICAL TEST BEFORE REPAIR

A. The first test charge may be unsatisfactory if the electrolyte level is too low in some cells (the level is not adjusted until the end of this charge). If faults have been observed, carry out a second test as follows:

(1) Charge the battery (see DESCRIPTION AND OPERATION Table 1).

(a) After the total charging time, continue to charge at 4.3A for 5 additional hours.

(b) Record the voltage of the cells at regular intervals.

(c) Cells with damaged separators will show significant and continuous temperature increases and their voltages will progressively decrease to less than 1.50V.

NOTE: Overcharging reduces the service life of cells. This particular test should, therefore, only be used when the battery has malfunctioned on board the aircraft or if abnormal behavior has been noticed during in-shop maintenance.

(d) Adjust the level of electrolyte during the last hour of overcharge.

(e) Discharge at 43A down to 20V. The cells with the following characteristics should be considered defective and should be replaced:

1 Final overcharge voltages of less than 1.50V (accuracy 0.5%).

2 Voltage below 1V before one hour of discharge during the final test discharge.

3 Short circuited cells (zero volts).

NOTE: If 3 cells during a service cycle or 5 cells over the life of the battery are replaced, it is recommended to replace all cells of the battery.

1. ASSEMBLY

NOTE: Tooling and equipment are identified in the list of "SPECIAL TOOLS AND EQUIPMENT".

A. Installation of the vent valves

(1) Ensure that the O-ring (240) is in good condition; replace if it shows signs of wear.

(2) Install the vent valve (230) with its O-ring (240) using the vent valve wrench from the special tool kit (fig 901).

B. Installation of a cell

(1) Using a paintbrush, put a thin layer of neutral petrolatum (petrolatum that is not acid) or light oil on the cell terminals and the links.

(2) Place a discharged cell in its position, making sure that it is correctly positioned with respect to polarity.

(3) Push in gently with a piece of softwood placed against the terminals.

CAUTION: To avoid cell damage, never use a hammer or strike the wood.

(4) Install the links, washers, and nuts in the following order:

(a) Links (090, 100, 110, 120, 130)

(b) Washers (080, 150)

(c) Nuts (070, 140), torque to 87 lb-in (9.83 Nm).

C. Installation of the complete temperature sensor

(1) Position the auxiliary connector with gasket (210).

(2) Position the sensor lug in place on the link (130) (see fig 701).

(3) Install the sensor with the nut and torque to 1.24 Nm ± 0.25 Nm (10 lb-in ± 2 lb-in).

(4) Fix the cable of the sensor along the links with wire ties (see fig 701).

(5) Install the connector (040) as described below (ASSEMBLY AND STORAGE 1.D.).

D. Installation of the electrical connector

(1) Install the electrical connector (040) with its gasket (050) and secure it with the four Sems screws (060).

(2) Install the links (090, 100, 110, 120, and 130) on the terminals following the order given in para. B (Installation of a Cell).

E. Assembly of a battery

(1) Insert all spacers (20) as shown in detailed parts list, fig. 1 page 1006.

(2) Insert the connector of the temperature sensor with its gasket (210) into the case (10), secure with the nut (200) (ASSEMBLY AND STORAGE 2.C.).

(3) Insert twenty VHP 430KH-3 cells, being careful to position them correctly for polarity.

(4) Install the complete connector as described in para. D.

(5) Lightly grease terminals and links using a neutral petroleum jelly or light oil applied with a paintbrush.

(6) Install the links (090 to 130) to the cells and connector terminals, install the washers (150) and nuts (140). Torque the nuts to 87 lb-in.

(7) Install the cover (030) and close the battery with the four toggle type fasteners.

2. <u>STORAGE</u>

A. Preparation of battery before storage

(1) After adjusting the electrolyte levels (see CHECKS), discharge the battery (see CHECKS Table 1).

(2) Install shorting spring across connector (40).

(3) Lightly grease with a neutral petroleum jelly or light oil the nuts, links, connector contact and all components that might be susceptible to atmospheric corrosion.

(4) Refit the cover and place the battery in the normal upright position.

B. Storage facilities

(1) Saft 4078-3, 4078-24, 40178-24 and 40178-26 batteries must be stored in a dry, dust free location.

C. Temperature conditions

(1) Batteries may be stored between -60°C and +60°C (-76°F and +140°F). However, the best temperature range is between 0°C and +30°C (+32°F to +86°F).

D. Packing

(1) Saft 4078-3, 4078-24 and 40178-24 batteries are normally packed in a cardboard box. For prolonged storage or for shipment overseas, packing in a welded plastic container is recommended. In this type of container and under optimal storage conditions, shelf life should be 10 years.

E. Transport

(1) It is important that nickel-cadmium 4078-3, 4078-24, 40178-24 and 40178-26, batteries be transported in the upright position. For this reason, packages must be clearly marked "TOP" and "BOTTOM".

F. Service after storage:

Storage Time	Servicing Procedure
Less than 3 months	Charge the battery (see DESCRIPTION AND OPERATION Table 1).
3 months to 1 year	Complete the periodic check (see CHECK).
More than 1 year	Complete the regular check (see CHECK).

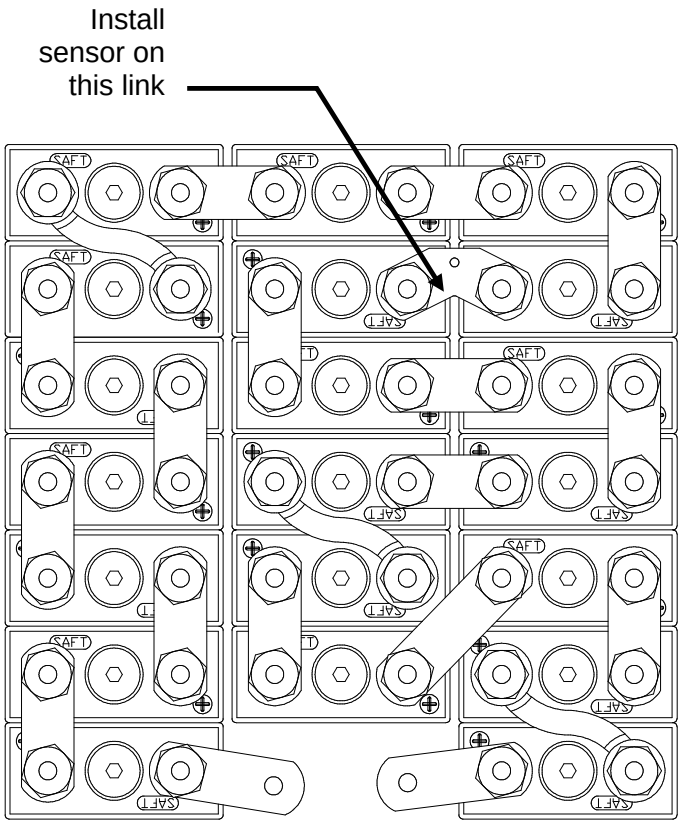

4078-3, 4078-24, 40178-24, and 40178-26 Battery Circuit
FIGURE 701

FITS AND CLEARANCES

1. Torque Table

Figure / Item Number	Torque Value	Name, Location
IPL Fig 1 140	87 ± 4 lb-in (10 ± 1 Nm)	Nut, Terminal, Upper
IPL Fig 1 200	20 ± 2 lb-in (2.26 ± 0.2 Nm)	Nut, Jam
IPL Fig 1 250	43.5 ± 2.5 lb-in (5 ± 0.3Nm)	Nut, Terminal, Lower

2. Fits and Clearances Table

No fits and clearances required.

SPECIAL TOOLS AND EQUIPMENT

		APPLICATION					
PART NUMBER	NOMENCLATURE	TEST/FAULT	DISASSEMBLY	CLEANING	CHECK	REPAIR	ASSEM./STORE
093382-000	Wrench, Vent Valve (fig. 901)	X	X	X	X	X	X
018327-000	Syringe, 20cm^3 (1.22in^3) (fig. 902)	X			X	X	
017556-000	Wrench, Cell Extraction (fig. 903)		X			X	
	Equalizing resistors (1Ω 3W)	X			X		
	Megohmmeter (10MΩ 250V continuous)	X			X		
	Precision Multimeter (volt, Ω, mA)	X			X	X	X
	0-60 Amp. DC Power Supply	X			X	X	
	0-60 Amp DC Load Bank		X		X	X	X

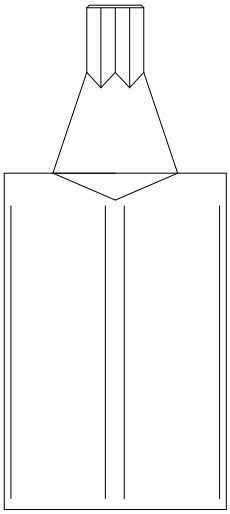

Wrench, Vent Valve
FIGURE 901

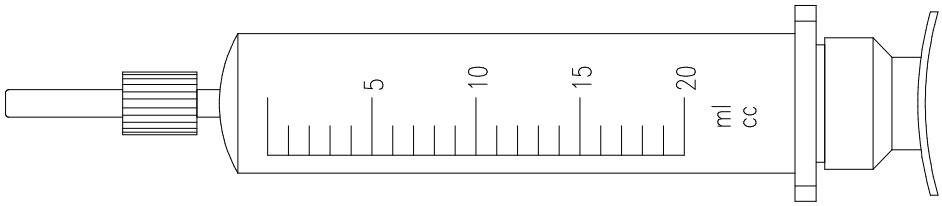

Syringe, $20cm^3$
FIGURE 902

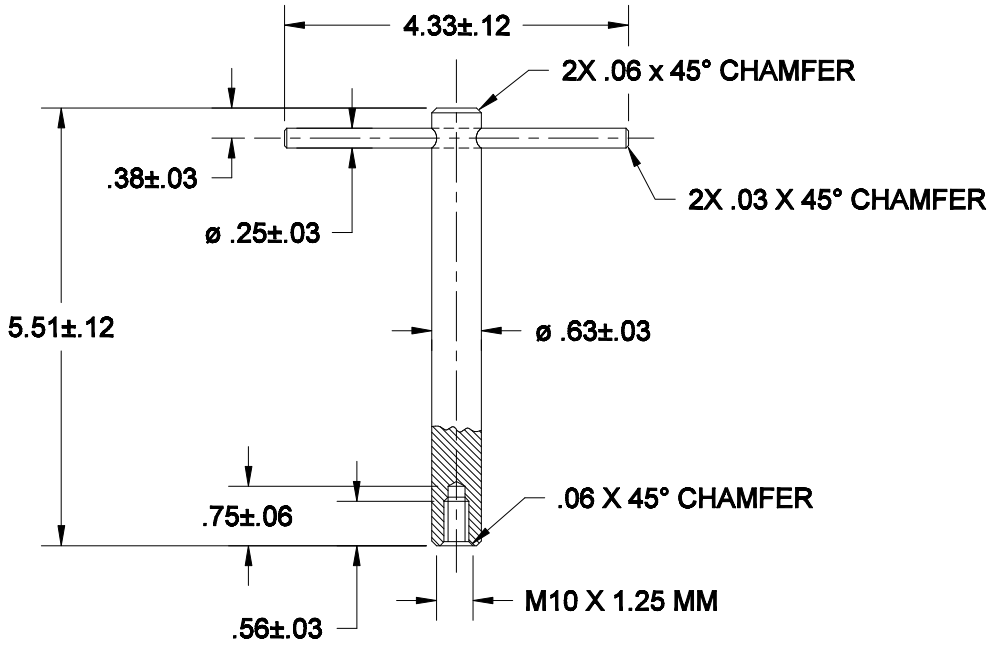

Wrench, Cell Extraction
(Dimensions in inches)
FIGURE 903

List of Consumable Materials

DESIGNATION	SPECIFICATION 1-OTAN 2-F 3-US 4-UK	SUPPLIER REFERENCE
Mineral Vaseline	1-S.743 2-AIR 3565 3-VLP 236 4-DEF 2333	ESSO Industrial Vaseline n.2 ELF Aviation Vaseline
Grease	1-G.392 3-MIL-G4343 4-DTD 5610	Dow Corning Molykote 55M
Glue		3 M France EC1236
Distilled Water	Physical: Clear, colorless, and odorless on boiling. Resistance at +20°C > 30,000 ohm. centimeter. Limit: 15,000ohm.centimeter in storage. Chemical: $5 \leq pH \leq 7$ Lack of organic matters and reducing substances: oxidizable carbon as $KMnO_4$ consumption < 30 milligram/liter Total $SO4^{2-}$ + Cl^- ions < 10 milligram/liter Total dissolved solids < 15 milligram/liter Silica as SiO_2 < 20 milligram/liter	Local Supply

ILLUSTRATED PARTS LIST

1. INTRODUCTION

A. The Illustrated Part List (IPL) is prepared in compliance with ATA 100. The IPL is intended to identify all the components of the unit.

(1) The Illustrated Parts List contains the following sections:

(a) Introduction

(b) Vendors Code Index

(c) List of Circuit Symbols (if applicable)

(d) Alphanumeric Index of Manufacturer's Part Numbers

(e) Detailed Parts List

2. HOW TO USE DETAILED PARTS LIST

A. The Detailed Parts List includes the nomenclature and illustrations of the unit components.

(1) The Detailed Part List columns are arranged as follows

(a) 1st column: Figure and Item Number

(b) 2nd column: Manufacturer's Part Number

(c) 3rd column: Airline Part Number

(d) 4th column: Nomenclature

(e) 5th column: Usage Code- (Applicability)

(f) 6th column: Units per Assy. (Quantity per next higher assembly)

(2) Figure and item numbers

(a) The figure number, covering items listed, is indicated on the first line at the top of each page.

(b) Assemblies, sub-assemblies and parts listed, but not illustrated, are identified by a dash (-) preceding the corresponding item numbers.

(c) A "lettered index" appearing before the item number is a cross-reference to the illustration of the variant called out from the corresponding main figure.

B. Manufacturer's part number

(1) Each of the assemblies, sub assemblies, and detailed parts, illustrated or not, is assigned a manufacturer's part number.

(2) When the manufacturer's actual part number exceeds 15 characters, an equivalent assigned part number is listed in the "Part Number" column preceded by the following annotation: "ORDER OVERLGTH....MADE BY V....” Both part numbers are listed in the Alphanumeric Index in their logical order; the actual part number is cross-referenced to the assigned part number preceded by the annotation "SEE>>>".

C. Nomenclature

(1) The nomenclature is indented to show the relationship between the parts listed, as follows:

1 2 3 4 5 6 7
Assembly
. Detail parts for assembly
. Sub assembly
. Attaching parts and/or storage for sub-assembly
***

. . Detail parts for sub-assembly
. . Sub-sub-assembly
. . Attaching parts and/or storage parts for sub-sub-assembly
****

. . . Detail parts for sub-sub-assembly

(2) This vendor code or the abbreviation "NP" (non-procurable) is placed at the extreme right-hand side of the 1st line of the nomenclature.

D. Applicability (Usage Code)

(1) An alphanumeric usage code indicates the applicability of sub-assemblies and detail parts to the next higher assembly(ies) or sub-assembly(ies).

(2) When the applicability is general, the "usage code" column is left blank.

(3) The usage code corresponds to the figure/item number of the next higher assembly(ies) or sub-assembly(ies), i.e. applicability 1A, 1B, 1C is written 1ABC.

E. Units per assembly

(1) The units per Assy column show the number of units required for the next higher assembly. In some cases, this information is replaced by the letters REF (reference) or AR (as required).

3. TERMS AND ABBREVIATIONS USED

AR: as required

ATTACHING PARTS

DELETED

DET: Detail

LH and RH: Left and Right

MADE BY

MADE FROM

MATCHED PARTS

MODIFIED FROM

NHA: Next higher assembly

NP: Non procurable

Old PN: Old reference

OPT TO: Optional parts

ORDER OVERLGHT MPN: Actual part number exceeding 15 characters

OVERSIZE: Oversize repair parts

POST SB: After applying Service Bulletin instructions

R: Revised

RF: For memories

REF: For reference

SAME AS

SEE

SEL FROM: Select from parts

STORAGE PARTS

SUPSDS by: Superseded by

UNDERSIZE: Undersize repair parts

T: tera 10E12	G: giga 10E9
M: mega 10E6	k: kilo 10E3
m: milli 10E-3	F: micro 10E-6
n: nano 10E-9	p: pico 10E-12

4. CHANGES

A. When an item is revised, added, or deleted, the letter "R" is shown in the right margin (the page date of issue changes).

B. The letter "R" appears in the right margin opposite the page number when all the item numbers are changed.

5. Vendor Code Index

VENDOR CODE	NAME - ADDRESS
V09052	Saft America Inc. 711 Industrial Blvd. Valdosta, GA 31601 Tel: (912) 247-2331 Fax: (912) 247-8486
F6177	Saft 156, Avenue de Metz 93230 Romainville France Tel: 33 1 49 15 34 34 Fax: 33 1 49 15 34 00

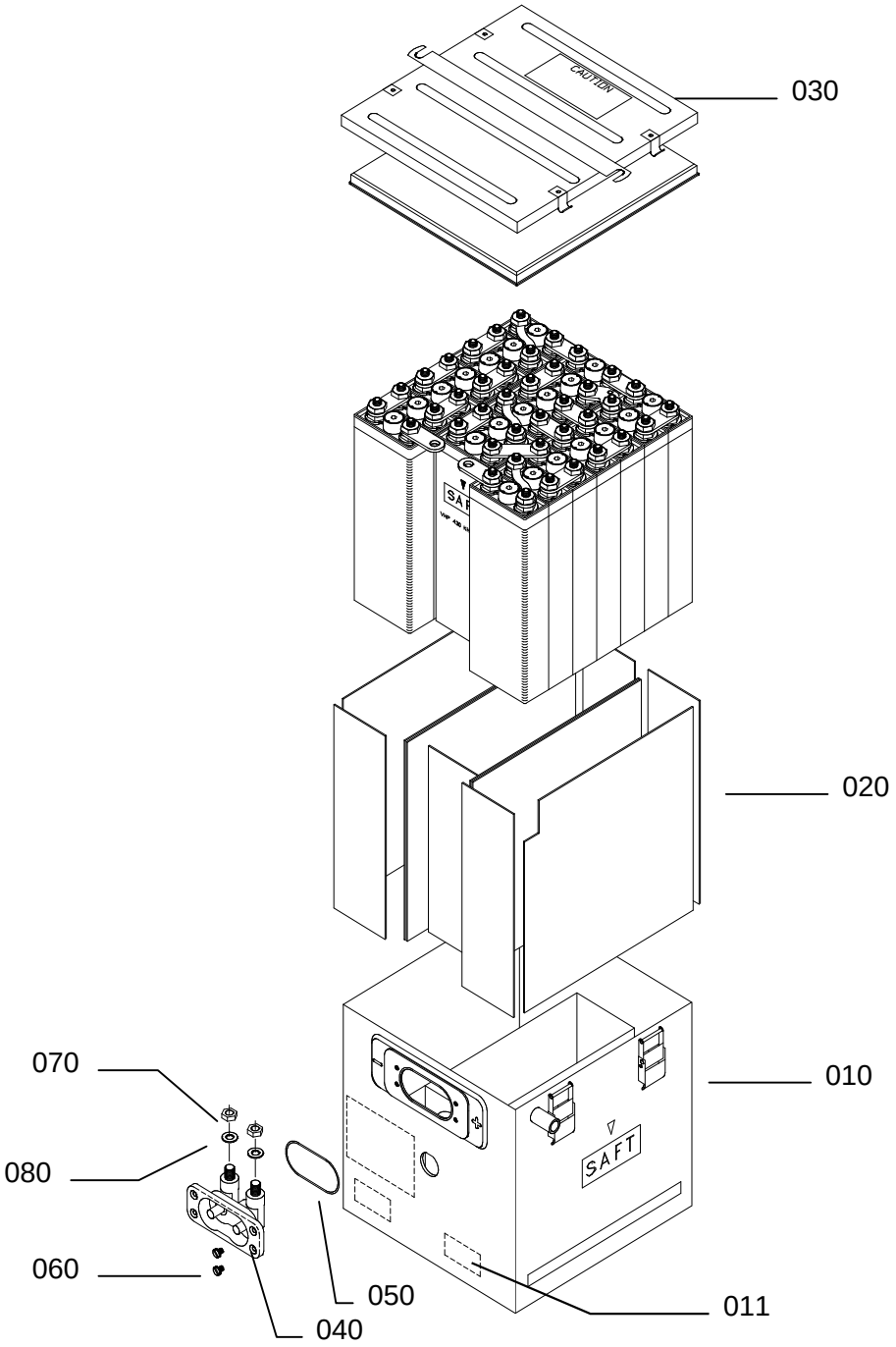

Battery, Exploded View
Figure 1 (Sheet 1 of 4)

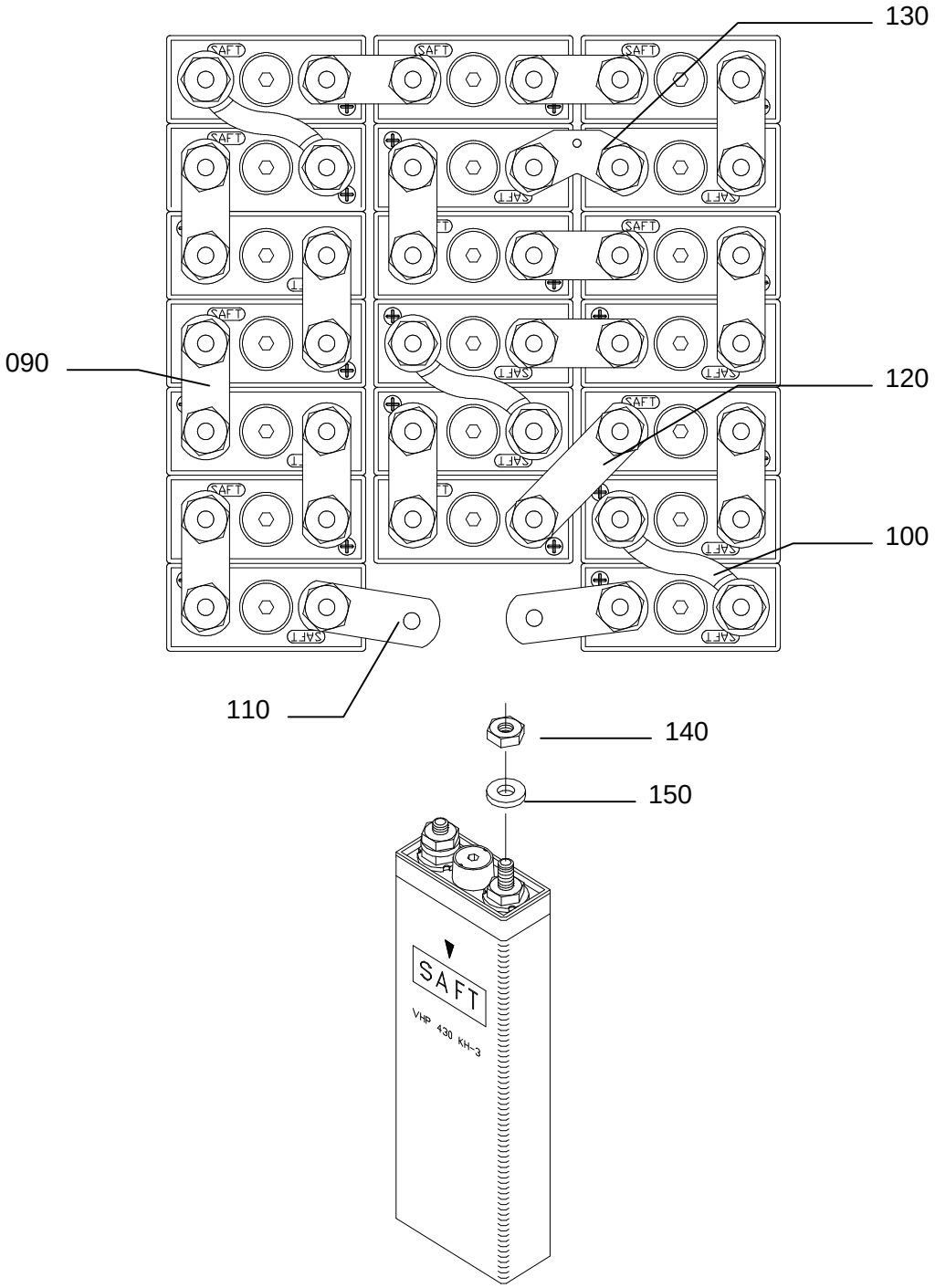

Battery, Exploded View
Figure 1 (Sheet 2 of 4)

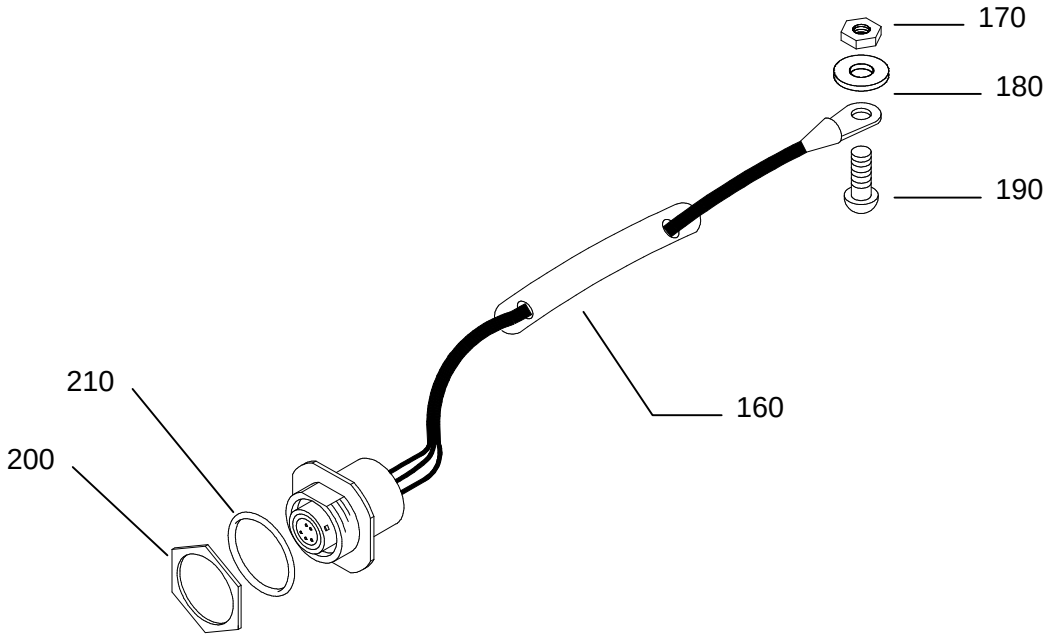

Battery, Exploded View
Figure 1 (Sheet 3 of 4)

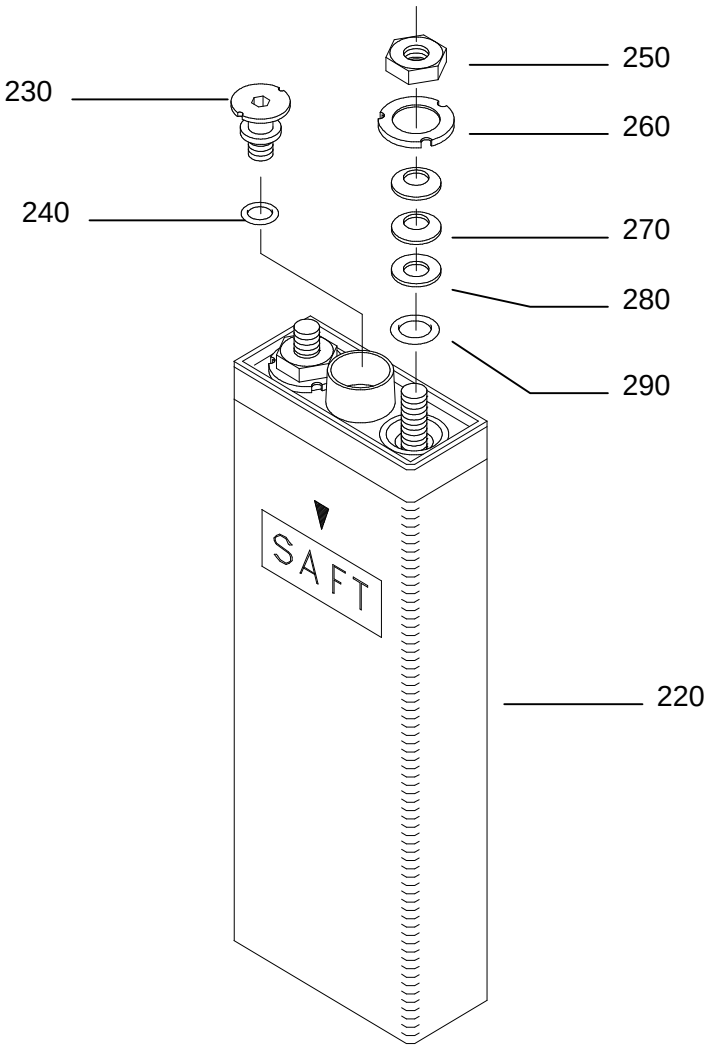

Battery, Exploded View
Figure 1 (Sheet 4 of 4)

ILLUSTRATED PARTS LIST

Fig	Item	Manufacturer's Part Number	Airline Part Number	Description 1 2 3 4 5 6 7	Usage Code	Qty
1	1	4078-3		20 VHP 430 KH-3 Battery Assembly	A	RF
	1A	4078-24		20 VHP 430 KH-3 Battery Assembly	B	RF
	1B	40178-24		20 VHP 430 KH-3 Battery Assembly	C	RF
	1C	40178-26		20 VHP 430 KH-3 Battery Assembly	D	RF
	010	021746-000		. Case, Marked 4078-3 (V09052)	AB	1
	010A	412895		. Case, Marked 4078-3 (F6177)	AB	1
	010B	024464-000		. Case, Marked 40178-24 (V09052)	C	1
	010C	025017-000		. Case, Marked 40178-26 (V09052)	D	1
	011	NP		. . Modification Label (V09052)	B	1
	020	019919-000		. . Kit, Spacer (V09052)		1
	020A	411429		. . Kit, Spacer (F6177)		1
	030	015599-000		. Cover & Pad Marked (V09052)		1
	030A	114300		. Cover & Pad Marked (F6177)		1
	040	021740-000		. Connector, Complete (V09052)		1
	040A	102392		. Connector, Complete (F6177)		1
	050	009384-000		. . Gasket (V09052)		1
	050A	100713		. . Gasket (F6177)		1
	060	093616-000		. . Screws, Sems (V09052)		4
	060A	100431		. . Screws, Sems (F6177)		4
	070	015579-000		. . Nut (V09052)		2
	070A	062007		. . Nut (F6177)		2
	080	022228-000		. . Washer, Belleville (V09052)		2
	080A	100094		. . Washer, Wave (F6177)		2
	090	015575-000		. Link (V09052)		14
	090A	012374		. Link (F6177)		14
	100	015576-000		. Link (V09052)		3
	100A	411691		. Link (F6177)		3
	110	015577-000		. Link (V09052)		2
	110A	015539		. Link (F6177)		2
	120	015578-000		. Link (V09052)		1
	120A	015266		. Link (F6177)		1
	130	015926-000		. Link (V09052)		1
	130A	114767		. Link (F6177)		1
	140	015579-000		. Nut (V09052)		40
	140A	062007		. Nut (F6177)		40
	150	022228-000		. Washer, Belleville (V09052)		40
	150A	100094		. Washer, Wave (F6177)		40
	160	019757-000		. Connector & Sensor Assembly (V09052)	A	1
	160A	412695		. Connector & Sensor Assembly (F6177)	A	1

Fig Item	Manufacturer's Part Number	Airline Part Number	Description 1 2 3 4 5 6 7	Usage Code	Qty
160B	024634-000		. Connector & Sensor Assembly (V09052)	BC	1
160C	025009-000		. Connector & Sensor Assembly (V09052)	D	1
170	093169-000		. . Nut Hex Locking (V09052)		1
170A	105405		. . Nut Hex Locking (F6177)		1
180	090061-000		. . Washer Flat (V09052)		1
180A	412899		. . Washer Flat (F6177)		1
190	093015-005		. . Screw Pan Head (V09052)		1
190A	412898		. . Screw Pan Head (F6177)		1
200	NP		. . Nut (V09052)		1
210	NP		. . O-Ring (V09052)		1
220	018725-000		. Cell, VHP430KH-3 (V09052)		20
220A	165797		. Cell, VHP430KH-3 (F6177)		20
230	023400-000		. . Valve, Vent (V09052)		1
230A	166160		. . Valve, Vent (F6177)		1
240	091180-008		. . . O-Ring (V09052)		1
240A	100593		. . . O-Ring (F6177)		1
250	015579-000		. . Nut (V09052)		2
250A	062007		. . Nut (F6177)		2
260	023388-001		. . Polarity Washer, Red (V09052)		1
260A	100694		. . Polarity Washer, Red (F6177)		1
260	023388-002		. . Polarity Washer, Blue (V09052)		1
260A	100693		. . Polarity Washer, Blue (F6177)		1
270	021871-000		. . Washer, Belleville (V09052)		4
270A	100094		. . Washer, Wave (F6177)		2
280	021870-000		. . Washer, Flat (V09052)		2
280A	100078		. . Washer, Flat (F6177)		2
290	091181-002		. . O-Ring (V09052)		2
290A	100594		. . O-Ring (F6177)		2